Features

- Low voltage drop: 0.17V@100mA
- High input voltage: 15V
- Low temperature coefficient
- Large Output Current: >0.35A
- Low Quiescent Current: 1.0uA
- Output voltage accuracy: tolerance ±2%
- Built-in current limiter
- SOT89 and SOT23-3 package

Applications

- Battery-powered equipment
- Hand-Hold Equipment
- GRS Receivers
- Wireless LAN

General Description

The HE72XX series is a group of positive voltage output, three-pin regulators, that provide a high current even when the input/output voltage differential is small. Low power consumption and high accuracy is achieved through CMOS and laser trimming technologies.

The HE72XX consists of a high-precision voltage reference, an error amplification circuit, and a current limited output driver. Transient response to load variations have improved in comparison to the existing series. SOT89 and SOT23-3 packages are available.

Selection Table

Part No.	Output Voltage	Package	Marking
HE7225xx	2.5V	SOT89 SOT23	
HE7228xx	2.8V		
HE7230xx	3.0V		
HE7233xx	3.3V		
HE7236xx	3.6V		
HE7250xx	5.0V		

Order Information

HE72①②③④

Designator	Symbol	Description
① ②	Integer	Output Voltage(2.1~5.0V)
	P	Package:SOT89
	M	Package:SOT23-3
④	R	RoHS / Pb Free
	G	Halogen Free

Note:"①②" stands for output voltages. Other voltages can be specially customized

Block Diagram

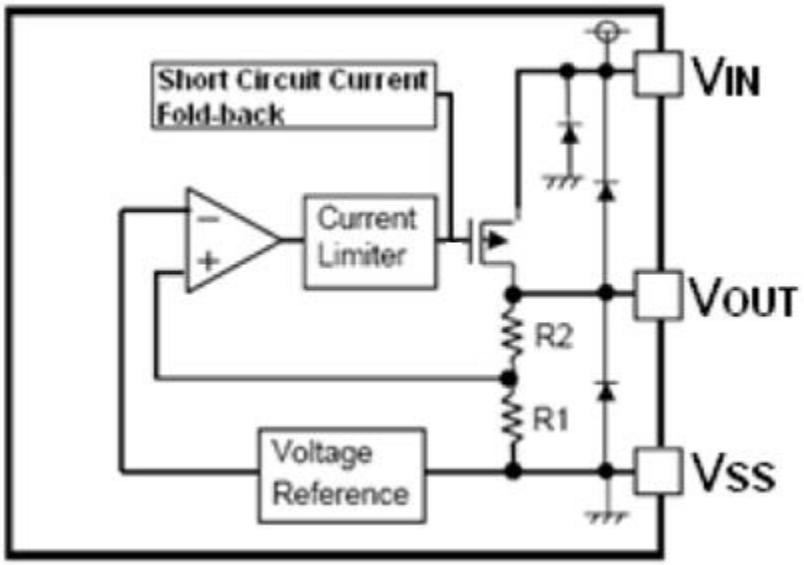

Pin Assignment

SOT89 (Top view)

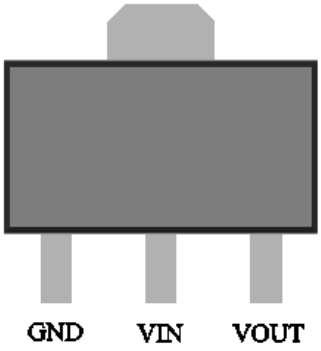

SOT23-3 (Top view)

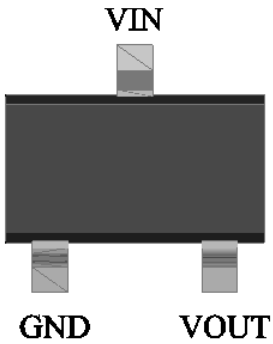

Absolute Maximum Ratings

Supply Voltage .....-0.3V to 18V

Operating Temperature .....-40℃ to 85℃

Storage Temperature .....-40℃ to 125℃

Note: These are stress ratings only. Stresses exceeding the range specified under “Absolute Maximum Ratings’’ may cause substantial damage to the device. Functional operation of this device at other conditions beyond those listed in the specification is not implied and prolonged exposure to extreme conditions may affect device reliability.

Marking Rule

（1）SOT23-3

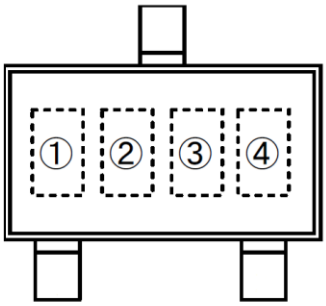

SOT-23
(TOP VIEW)

List of Product Name vs. Product Code

Product Name	Product Code		
	(1)	(2)	(3)
S-1206B12-M3T1G	S	A	A
S-1206B13-M3T1G	S	A	B
S-1206B14-M3T1G	S	A	C
S-1206B15-M3T1G	S	A	D
S-1206B16-M3T1G	S	A	E
S-1206B17-M3T1G	S	A	F
S-1206B18-M3T1G	S	A	G
S-1206B1J-M3T1G	S	A	H
S-1206B19-M3T1G	S	A	I
S-1206B20-M3T1G	S	A	J
S-1206B21-M3T1G	S	A	K
S-1206B22-M3T1G	S	A	L
S-1206B23-M3T1G	S	A	M
S-1206B24-M3T1G	S	A	N
S-1206B25-M3T1G	S	A	O
S-1206B26-M3T1G	S	A	P
S-1206B27-M3T1G	S	A	Q
S-1206B28-M3T1G	S	A	R
S-1206B2J-M3T1G	S	A	S
S-1206B29-M3T1G	S	A	T
S-1206B30-M3T1G	S	A	U
S-1206B31-M3T1G	S	A	V

Product Name	Product Code		
	(1)	(2)	(3)
S-1206B32-M3T1G	S	A	W
S-1206B33-M3T1G	S	A	X
S-1206B34-M3T1G	S	A	Y
S-1206B35-M3T1G	S	A	Z
S-1206B36-M3T1G	S	B	A
S-1206B37-M3T1G	S	B	B
S-1206B38-M3T1G	S	B	C
S-1206B39-M3T1G	S	B	D
S-1206B40-M3T1G	S	B	E
S-1206B41-M3T1G	S	B	F
S-1206B42-M3T1G	S	B	G
S-1206B43-M3T1G	S	B	H
S-1206B44-M3T1G	S	B	I
S-1206B45-M3T1G	S	B	J
S-1206B46-M3T1G	S	B	K
S-1206B47-M3T1G	S	B	L
S-1206B48-M3T1G	S	B	M
S-1206B49-M3T1G	S	B	N
S-1206B50-M3T1G	S	B	O
S-1206B51-M3T1G	S	B	P
S-1206B52-M3T1G	S	B	Q

Remark Please contact our sales office for products with output voltage values other than the above.

（2）SOT89

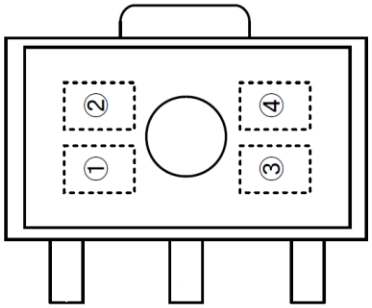

SOT-89
(TOP VIEW)

Product Code: E

Output Voltage Code

Vout	Code	Vout	Code	Vout	Code
1.5V	1	2.7V	C	3.9V	O
1.6V	2	2.8V	D	4.0V	P
1.7V	3	2.9V	E	4.1V	Q
1.8V	4	3.0V	F	4.2V	R
1.9V	5	3.1V	G	4.3V	S
2.0V	6	3.2V	H	4.4V	T
2.1V	7	3.3V	I	4.5V	U
2.2V	8	3.4V	J	4.6V	V
2.3V	9	3.5V	K	4.7V	W
2.4V	0	3.6V	L	4.8V	X
2.5V	A	3.7V	M	4.9V	Y
2.6V	B	3.8V	N	5.0V	Z

Data Code: XX

Note: The last two of them are based on the time of this product which is the first time into production, and the third is the launch of this product ,it can be in 1 ~ 9 , which is expressed in "0" in October, in November with an "A", in December with "B"; the fourth is of the launch of the product, such as expressed in "0" in 2010, in "3" in 2013. For example: EZ81 represents HE7250PR product is first put into production in August in 2011.

Electrical Characteristics

HE72XX for any output voltage （Ta=25℃）

Parameter	Symbol	Conditions	Min.	Typ.	Max.	Unit
Output Voltage	Vout	Vin=Vout+1V 1.0mA≤Iout≤30mA	Vout×0.98	--	Vout×1.02	V
Output Current*1	Iout	Vin-Vout=1V	--	350	--	mA
Low dropout*2	V_{drop}	Refer to the next table				
Line Regulation	$\frac{\Delta V_{OUT}}{\Delta V_{IN} \times V_{OUT}}$	1.6V≤Vin≤8V Iout=100mA	--	0.05	0.2	%/V
Load Regulation	△Vout	Vin= Vout+1V 1.0mA≤Iout≤100mA	--	12	30	mV
Output voltage Temperature Coefficiency	$\frac{\Delta V_{OUT}}{\Delta Ta}$	Iout=30mA 0℃≤Ta≤70℃	--	±100	--	Ppm/℃
PSRR	PSRR	F=1KHz Vin=Vout+1V	--	40	--	dB
Supply Current	Iss1	--	--	1	2	uA
Input Voltage	Vin	--	--	--	15	V

Electrical Characteristics by Output Voltage：

Output Voltage Vout(V)	Dropout Voltage Vdif（V）		
	Conditions	Typ.	Max.
Vout ≤ 2.0V	Iout=60 mA	0.1	0.12
2.0 < Vout ≤ 3.0	Iout=80 mA	0.12	0.14
3.0 < Vout ≤ 4.0	Iout=100 mA	0.16	0.18
4.0 < Vout ≤ 5.0		0.17	0.18
3.0 < Vout ≤ 4.0	Iout=200 mA	0.21	0.24
4.0 < Vout ≤ 6.0		0.20	0.22
3.0 < Vout ≤ 4.0	Iout=350 mA	0.7	0.75
4.0 < Vout ≤ 6.0		0.72	0.76

Typical Application

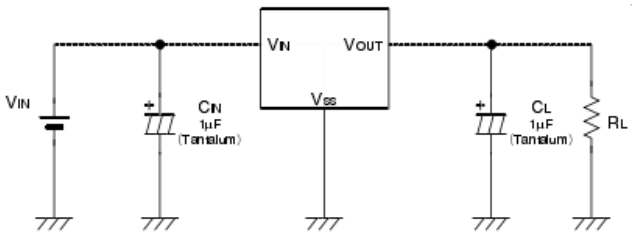

Note1:Input capacitor C_{IN}=1uF.

Note2:Ouput capacitor C_{OUT}=1uF/6.8uF(1uF Tantalum capacitor or 6.8uF ceramic capacitor is recommended).

Typical Performance Characteristics

(1) Output Voltage vs Input voltage

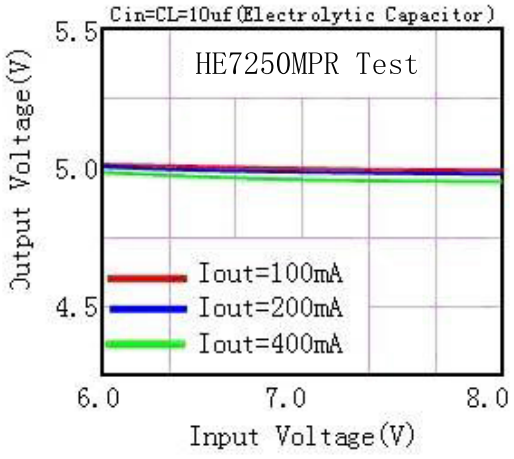

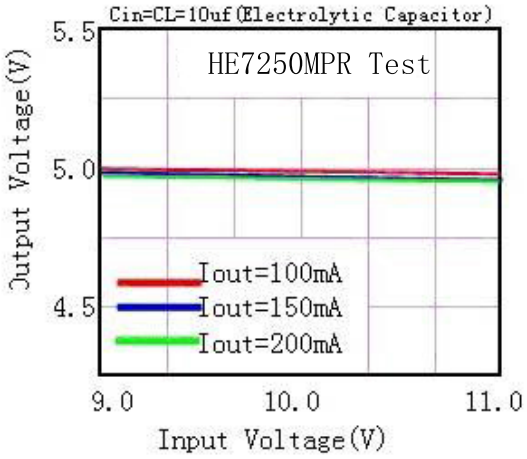

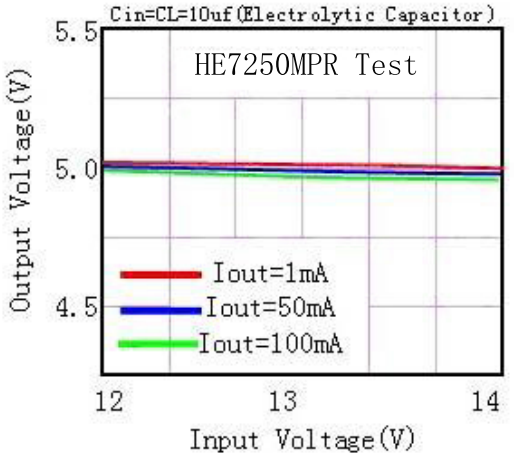

(2) Output Voltage vs.Output Current

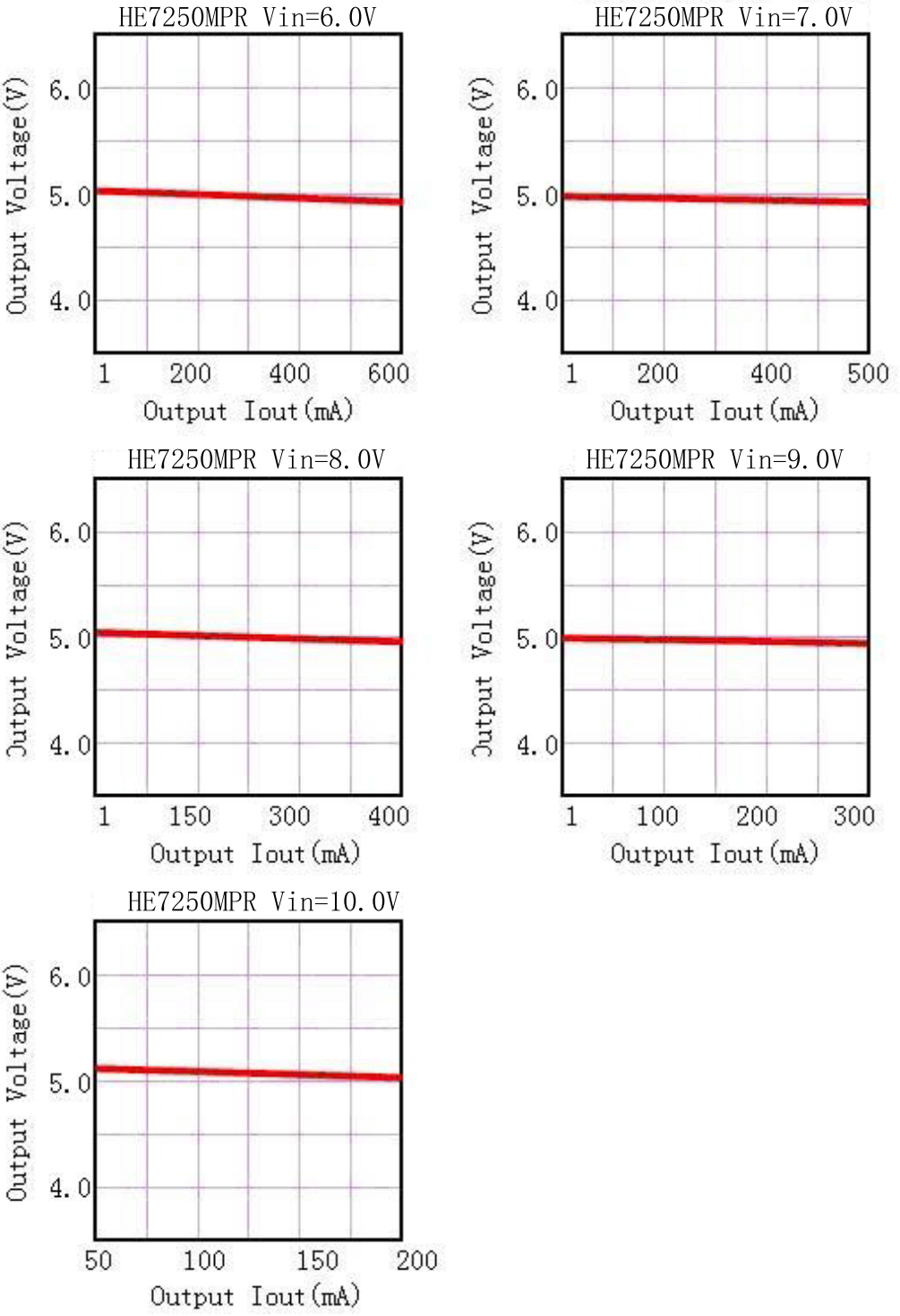

（3） Output Voltage vs.Ambient Temperature

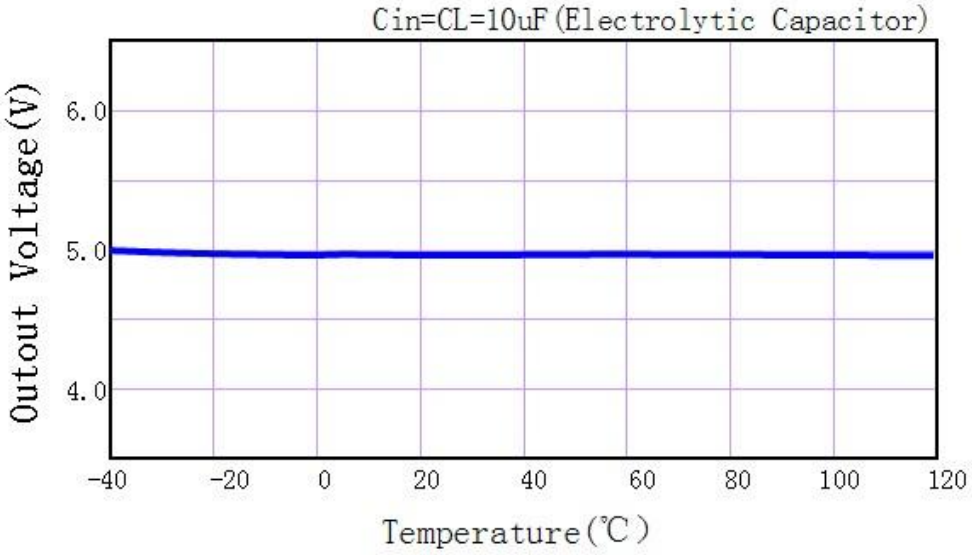

Package Information

3-pin SOT89 Outline Dimensions

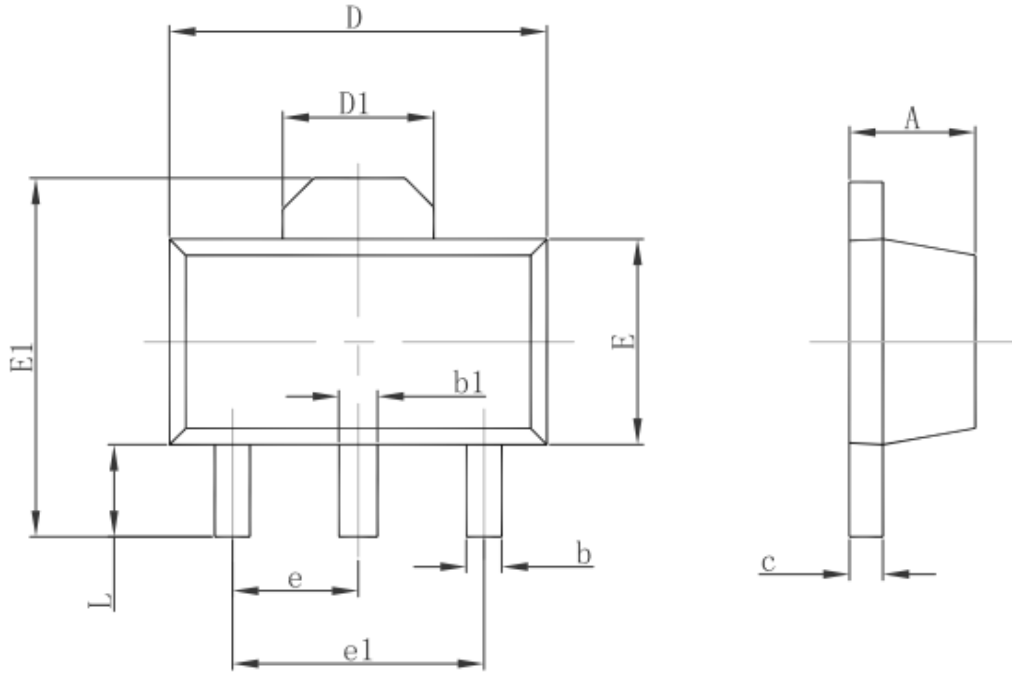

Symbol	Dimensions In Millimeters		Dimensions In Inches	
	Min.	Max.	Min.	Max.
A	1.400	1.600	0.055	0.063
b	0.320	0.520	0.013	0.020
b1	0.400	0.580	0.016	0.023
c	0.350	0.440	0.014	0.017
D	4.400	4.600	0.173	0.181
D1	1.550 REF.		0.061 REF.	
E	2.300	2.600	0.091	0.102
E1	3.940	4.250	0.155	0.167
e	1.500 TYP.		0.060 TYP.	
e1	3.000 TYP.		0.118 TYP.	
L	0.900	1.200	0.035	0.047

3-pin SOT23-3 Outline Dimensions

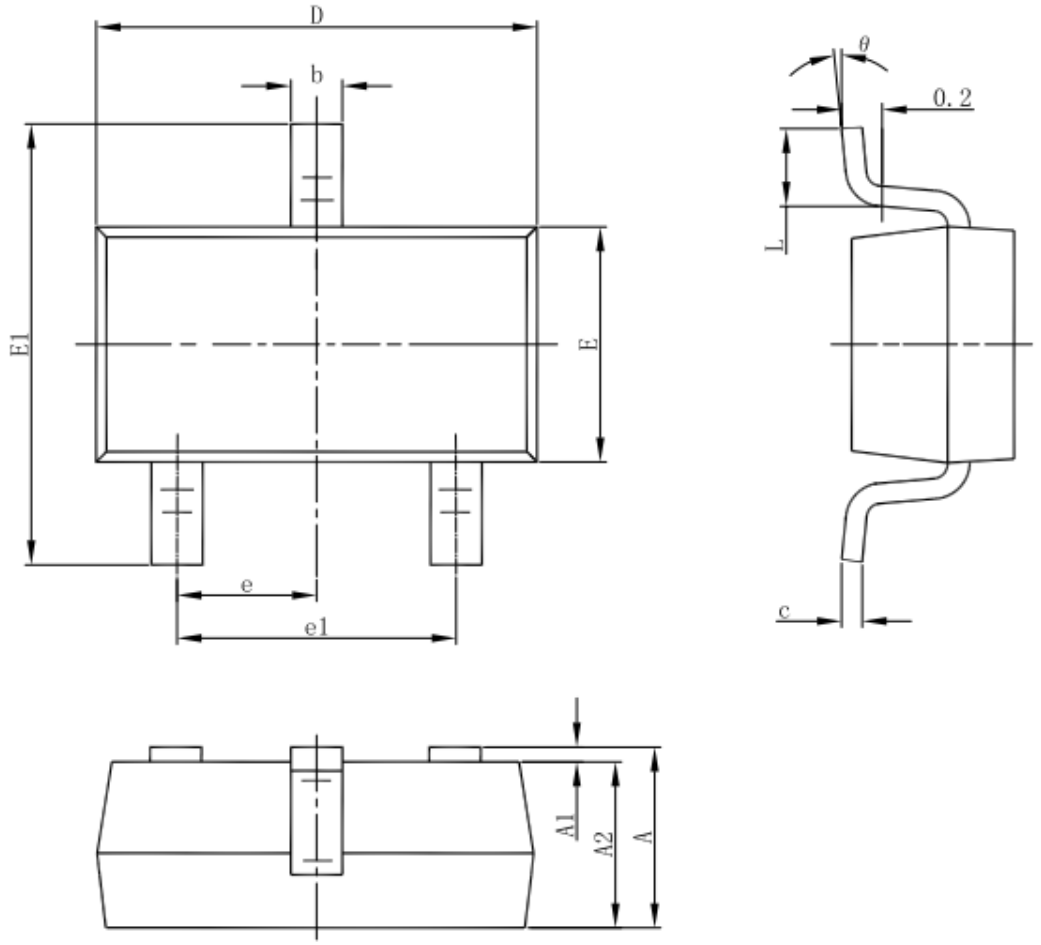

Symbol	Dimensions In Millimeters		Dimensions In Inches	
	Min	Max	Min	Max
A	1.050	1.250	0.041	0.049
A1	0.000	0.100	0.000	0.004
A2	1.050	1.150	0.041	0.045
b	0.300	0.500	0.012	0.020
c	0.100	0.200	0.004	0.008
D	2.820	3.020	0.111	0.119
E	1.500	1.700	0.059	0.067
E1	2.650	2.950	0.104	0.116
e	0.950(BSC)		0.037(BSC)	
e1	1.800	2.000	0.071	0.079
L	0.300	0.600	0.012	0.024
θ	0°	8°	0°	8°